AUTOMOBILE MANUFACTURERS ASSOCIATION
CONSOLIDATED SPECIFICATION QUESTIONNAIRE

		MODEL NAME	SYMBOL
MAKE OF CAR:	PACKARD	CLIPPER DELUXE	5540
COMPANY:	PACKARD DIVISION STUDEBAKER-PACKARD CORPORATION 1580 E. GRAND BOULEVARD DETROIT 32, MICHIGAN	CLIPPER SUPER	5540
		CLIPPER CUSTOM	5560
		PACKARD	5580
MODEL YEAR:	1955 **DATE** JANUARY 15, 1955		

TABLE OF CONTENTS

General Specifications	1	Frame	16
Engine	2	Front Suspension	16
Electrical	8	Steering	17
Drive Units	12	Rear Suspension	18
Brakes	15	Body	19

Index 24

NOTES: 1. The specifications set forth herein are those in effect at the date of compilation and are subject to change without notice.
2. All specifications are standard for the models under which they are listed unless otherwise indicated.
3. All dimensions are nominal engineering dimensions unless otherwise indicated.
4. Unless otherwise indicated, specifications apply to 5 or 6 passenger, 4-door sedan or equivalent.

GENERAL SPECIFICATIONS

Model			5540	5560	5580
Wheelbase			122"		127"
Tread	Front		59.7"		60"
	Rear		60"		60.9"
Maximum Overall Dimensions	Length (L-103)		214.8"		218.5"
	Width (W-103)		78"		
	Height (H-101)		62"		62.3"
Steering ratio—overall			30.9:1 (22:1 P.S.)		30.9:1 (22.5:1 P.S.)
Turning diameter (curb to curb)			43' (41' P.S.)		45' (43' P.S.)
Shipping weight*			3700	3915	4355
Transmission— (Specify standard, optional, not avail.)		Conventional	STANDARD		
		Overdrive	OPTIONAL		
		Automatic	OPTIONAL		STANDARD
Axle ratio		Conventional	3.9		
		Overdrive	3.9		
		Automatic	3.23 (X)		3.07, 3.54, 3.23
Tire size			7.60 x 15		8.00 x 15
Engine		Type	90° - V		
		No. of cylinders	EIGHT		
		Valve arrangement	OVERHEAD		
		Bore and stroke	3.8125" x 3.5"	4" x 3.5"	
		Piston displacement, cu. in.	320	352	
		Standard compression ratio	8.5:1	8.5:1	
		Maximum bhp at engine rpm	225 @ 4600	245 @ 4600	260 @ 4600 (XX)
		Maximum torque at rpm	325 @ 2400-2800	355 @ 2400-2800	355 @ 2400-2800 (XXX)

*Standard car weight, not including gas and water.

(X) Standard Axle Ratio for 5522 with Automatic Transmission 3.07:1.

(XX) 275 Horsepower at 4800 r.p.m. on Packard Caribbean (5588).

(XXX) 355 lb. ft. at 2400-3200 r.p.m. on Packard Caribbean (5588).

AMA Consolidated Specification Questionnaire

MAKE OF CAR PACKARD **MODEL YEAR** 1955

MODEL	5540	5560	5580

ENGINE—GENERAL

Type	V, In-line, other		'V'		
	Angle of V		90°		
No. of cylinders			EIGHT		
Valve arrangement			OVERHEAD VALVES		
Bore and stroke			3.8125" x 3.5"	4" x 3.5"	
Piston displacement, cu. in.			320	352	
Numbering system (front to rear)	L. Bank		1-3-5-7		
	R. Bank		2-4-6-8		
Firing order			1-8-4-3-6-5-7-2		
Compression ratio	Standard Head		8.5:1	8.5:1	
	Optional Head		----	YES	
Cylinders	Head Material	Standard	CAST IRON		
		Optional	----		
	Sleeve—Wet, dry, other, none		NONE		
Number of mounting points		Front	TWO		
		Rear	ONE		
Taxable horsepower	(Dia.² x No. Cyl.) 2.5		46.5	51.2	
Advertised max. brake horsepower at engine RPM*	Standard head		225 @ 4600	245 @ 4600	260 @ 4600 (X)
	Optional head		N.A.		
	With fuel (Octane and method)	Standard Head	93 (RESEARCH)		
		Optional Head	N.A.		
Max. torque (lb. ft. @ RPM)	Standard head		325 @ 2400-2800	355 @ 2400-2800 (XX)	
	Optional head		N.A.		
Recommended idle speed (neutral)			425-475 RPM		

ENGINE—PISTONS

Material			ALUMINUM ALLOY	
Description and finish			CAM GROUND, AUTOTHERMIC FLAT HEAD, SLIPPER TYPE SKIRT, TIN PLATED	
Weight (piston only) oz.			22.293	24.763
Clearance	Top land		.021" - .027"	
	Skirt	Top	.001" - .0015"	
		Bottom	.000" - .0015"	
Ring groove depth	No. 1 ring		.2035"	.213"
	No. 2 ring		.2035"	.213"
	No. 3 ring		.2035"	.213"
	No. 4 ring		----	----

*Corrected as defined by SAE Engine Test Code, with the following standard power consuming accessories: Dynamometer Exhaust, Water Pump, No Fan, Generator (Not Charging), Fuel Pump, MBT Spark, Manual Fuel, In-Take Manifold Heat Off.

(X) 275 Horsepower at 4800 r.p.m. on Caribbean Model 5588.
(XX) 355 lb. ft. at 2400-3200 r.p.m. on Caribbean Model 5588.

AMA Consolidated Specification Questionnaire

MAKE OF CAR PACKARD **MODEL YEAR** 1955

MODEL			5540	5560	5580
ENGINE—RINGS					
Type (top to bottom)	No. 1 oil or comp.		TAPER FACE COMPRESSION		
	No. 2 oil or comp.		TAPER FACE COMPRESSION		
	No. 3 oil or comp.		VENTILATED OIL RING (WIDE SLOT)		
	No. 4 oil or comp.		----		
No. rings above piston pin			3		
Compression	Material		IRON		
	Coating		CHROME (UPPER RING) FERROX (LOWER RING)	CHROME (UPPER RING) FERROX (LOWER RING)	
	Width		.078"	.078"	
	Gap		.015"	.019"	
	Maximum wall thickness		.191"	.200"	
Oil	Material		IRON		
	Coating		NONE OR BLUED		
	Width		.186"		
	Gap		.015"	.018"	
	Maximum wall thickness		.160"	.166"	
Location of expanders			UNDER OIL RING		
ENGINE—PISTON PINS					
Material			ALLOY STEEL, HEAT TREATED		
Length			3.250"		
Diameter			.9803"		
Type	Locked in rod, in piston, floating, etc.		FLOATING		
	Bushing	In rod or piston	IN ROD		
		Material	BRONZE		
Clearance	In piston		.0000-.0002" WITH PISTON @ 70°-160° F.		
	In rod		.0000-.0004"		
Direction offset in piston			.0625" TOWARD MAJOR THRUST SIDE		
ENGINE—CONNECTING RODS					
Material			STEEL FORGING		
Weight (oz.)			1 LB. 10.688 OZ.		
Length (center to center)			6.7182"		
Bearing	Material		STEEL BACKED BABBITT		
	Type (cast-in or removable)		REMOVABLE		
	Effective length		.939"		
	Clearance		.0005" TO .0025"		
	End play		.003" TO .011" (TWO RODS)		
ENGINE—CRANKSHAFT					
Material			CAST - STEEL		
Weight (lb.)			55 LBS.		

AMA Consolidated Specification Questionnaire

MAKE OF CAR PACKARD **MODEL YEAR** 1955

MODEL	5540	5560	5580

ENGINE—CRANKSHAFT (cont.)

Vibration damper type			RUBBER FLOATED	
End thrust taken by bearing (No.)			NO. 5 - REAR MAIN	
Crankshaft end play			.0035" TO .0085"	
Main bearing	Material		BABBITT	#1, 2, 3, & 4 COPPER-LEAD, #5 BABBITT
	Type (cast-in or removable)		REMOVABLE STEEL BACKED	
	Clearance		.0005" TO .0025"	
	Journal dia. and bearing effective length	No. 1	2.4990" x .950"	
		No. 2	2.4990" x .950"	
		No. 3	2.4990" x .950"	
		No. 4	2.4990" x .950"	
		No. 5	2.4990" x 1.736"	
		No. 6	----	
		No. 7	----	
	Direction offset from cyl. bore		NONE	
Connecting rod crankpin journal diameter			2.250"	

ENGINE—CAMSHAFT

Material			CAST ALLOY IRON
Bearings	Material		STEEL BACKED BABBITT
	Number		5
Type of drive	Gear or chain		CHAIN
	Crankshaft gear or sprocket material		STEEL, HEAT TREATED
	Camshaft gear or sprocket material		CAST ALLOY IRON
	Timing chain	Make	MORSE
		No. of links	64
		Width	1.000"
		Pitch	.375"

ENGINE—VALVE SYSTEM

Hydraulic lifters (yes, no)		YES
Special provision for valve rotation (intake, exhaust)		NONE
Rocker ratio		1.6 TO 1
Operating tappet clearance (indicate hot or cold)	Intake	AUTOMATIC TAKE UP
	Exhaust	AUTOMATIC TAKE UP
Tappet clearance for timing	Intake	NOT USED
	Exhaust	NOT USED
Timing marks on fly-wheel, damper, other		ON VIBRATION DAMPER & CAMSHAFT CHAIN COVER

AMA Consolidated Specification Questionnaire

MAKE OF CAR PACKARD **MODEL YEAR** 1955

MODEL			5540	5560	5580
ENGINE—VALVE SYSTEM (cont.)					
Timing	Intake	Opens (°BTC)	14°		
		Closes (°ABC)	56°		
	Exhaust	Opens (°BBC)	52°		
		Closes (°ATC)	18°		
Intake	Material		SILICHROME STEEL		
	Overall length		5.712"		
	Actual overall head dia.		1.937"		
	Angle of seat		30° (NOMINAL)		
	Seat insert material		NONE		
	Stem diameter		.3725"		
	Stem to guide clearance		SELECTED FOR .001"-.002"		
	Lift		.374"		
	Outer spring press. and length	Valve closed (lb. @ in.)	78 TO 86 LBS. @ 1.750"		
		Valve open (lb. @ in.)	158 TO 172 LBS. @ 1.375"		
	Inner spring press. and length	Valve closed (lb. @ in.)	NONE - NOT USED		
		Valve open (lb. @ in.)	NONE - NOT USED		
Exhaust	Material		AUSTENITIC STEEL		
	Overall length		5.690"		
	Actual overall head dia.		1.687"		
	Angle of seat		45° (NOMINAL)		
	Seat insert material		NONE		
	Stem diameter		.3715"		
	Stem to guide clearance		SELECTED FOR .002"-.003"		
	Lift		.374"		
	Outer spring press. and length	Valve closed (lb. @ in.)	78 TO 86 LBS. @ 1.750"		
		Valve open (lb. @ in.)	158 TO 172 LBS. @ 1.375"		
	Inner spring press. and length	Valve closed (lb. @ in.)	NONE - NOT USED		
		Valve open (lb. @ in.)	NONE - NOT USED		
ENGINE—LUBRICATION SYSTEM					
Type of lubrication (splash, pressure, nozzle)	Main bearings		PRESSURE		
	Connecting rods		PRESSURE		
	Piston pins		OIL MIST		
	Camshaft bearings		PRESSURE		
	Tappets		PRESSURE		
	Timing gear or chain		PRESSURE JET		
	Cylinder walls		PRESSURE JET		

AMA Consolidated Specification Questionnaire

MAKE OF CAR PACKARD **MODEL YEAR** 1955

MODEL	5540	5560	5580

ENGINE—LUBRICATION SYSTEM (cont.)

Oil pump type	GEAR	
Normal oil pressure (lb. @ rpm)	45-50 PSI @ 2800 RPM	
Oil pressure gage type (electric or mechanical)	ELECTRIC	
Type oil intake (floating, stationary)	FLOATING	
Oil filter type (full flow, partial flow)	PARTIAL FLOW (OPTIONAL)	PARTIAL FLOW
Capacity of crankcase, less filter—refill (qt.)	5 QUARTS	
Oil grade recommended (SAE viscosity and temperature range)	NOT LOWER THAN + 32° F. --- SAE 20 or 20 W. AS LOW AS - 10° F. --- SAE 10 W. BELOW - 10° F. --- SAE 5 W.	
Oil type recommended	ML, MM, OR MS DEPENDING ON VEHICLE OPERATION	

ENGINE—FUEL SYSTEM

Recommended fuel	Standard head		PREMIUM		
	Optional head		----		
Fuel Tank	Capacity (gals.)		20 GALLONS		
	Filler Location		LEFT SIDE IN REAR FENDER		
Fuel Filter	Type		CERAMIC		
	Location		CARBURETOR INLET		
Fuel pump	Type (elec. or mech.)		MECHANICAL		
	Location		RIGHT SIDE, FRONT OF ENGINE		
	Pressure range		3.5 TO 5.5 PSI		
	Vacuum booster (std., optl., none)		STANDARD		
Carburetor	Make		CARTER	ROCHESTER	
	Model number		WCFB - 2232-S	4GC	4GC
	Number used		ONE (X)		
	Type	Downdraft, side inlet, other	DOWNDRAFT		
		Single or dual	4 BARREL		
	Intake manifold heat control (manual, auto., none)		AUTOMATIC		
	Automatic choke type (integral, other)		INTEGRAL		
	Air cleaner type	Standard	OIL BATH		OIL BATH
		Optional	----		

ENGINE—EXHAUST SYSTEM

Type (single, single with cross-over, dual, other)		SINGLE WITH CROSS OVER	SINGLE WITH (XX) CROSS OVER-DUAL	DUAL
Muffler type (rev. flow, str. thru, sep.resonator)		REV. FLOW	REV. FLOW SEP. RESONATOR	REV. FLOW SEP. RESONATOR
Exhaust pipe dia.	Branch	2"	2"	
	Main	2.250"	2.250"	2" (DUAL)
Tail pipe diameter		2"	2"	1.750" (DUAL)

(X) Two 4-Barrel Carburetors on Caribbean Model 5588.

(XX) Dual Exhaust System Optional on 5560, with 2" Diameter Main Exhaust Pipes, and 1.750" Diameter Tail Pipes.

AMA Consolidated Specification Questionnaire

MAKE OF CAR PACKARD **MODEL YEAR** 1955

MODEL	5540	5560	5580

ENGINE—COOLING SYSTEM

Type (pressure system, atmospheric, other)			PRESSURE SYSTEM		
Radiator cap relief valve press.			11-13 PSI		
Circulation thermostat	Type (choke, bypass)		CHOKE		
	Starts to open at		167° - 173° F.		
Water pump	Type (centrifugal, other)		CENTRIFUGAL		
	Number of pumps		1		
	Drive (V-belt, other)		V-BELT		
	Bearing type		DOUBLE ROW BALL		
By-pass recirculation type (internal, external)			NONE		
Radiator core type (cellular, tube and fin)			TUBE AND FIN		
Cooling system capacity	With heater (qt.)		26 1/2		27
	Without heater (qt.)		26		26
Water jackets full length of cylinder (yes, no)			YES		
Water all around cylinder (yes, no)			YES		
Radiator hose	Lower	Number and type (molded, straight)	1 - MOLDED		2 - STRAIGHT
		Inside diameter and length	1 3/4" x 13 21/64"		1 3/4" x 3" 1 3/4" x 5 1/4"
	Upper	Number and type (molded, straight)	1 - MOLDED		
		Inside diameter and length	1 3/4" x 12 25/64"		
	By-pass	Number and type (molded, straight)	NOT USED		
		Inside diameter and length	NOT USED		
Drive belts	Fan	Number used	ONE		
		Angle of V	36°		
		Outside length	56 11/16"		
		Width	3/8"		
	Generator	Angle of V	SEE FAN BELT		
		Outside length	---		
		Width	---		
Fan	Number of blades and spacing		FOUR - 76° AND 104°		
	Diameter		19 7/8"		
	Ratio—fan to crankshaft revolutions		.92 TO 1.00		
	Bearing type		DOUBLE ROW BALL BEARING		

AMA Consolidated Specification Questionnaire

MAKE OF CAR PACKARD **MODEL YEAR** 1955

MODEL			5540	5560	5580

ELECTRICAL—SUPPLY SYSTEM

Battery	Make and Model		AUTO-LITE OR WILLARD	
	Voltage Rtg. & Plates/cell		12-VOLT	
	SAE Designation & Amp Hr. Rtg		STANDARD, 60 AMPERE HOUR	
	Location		ON LEFT FRONT FENDER SPLASHER	
	Terminal grounded		POSITIVE	
Generator	Make		AUTO-LITE	DELCO-REMY
	Model		GJC 6001 A	1102022
	Type		SHUNT	
	Ratio—Gen. to Cr/s rev.		2.25:1	
Regulator	Make		AUTO-LITE	DELCO-REMY
	Model		VRX 6007 A	1118953
	Type		CURRENT AND VOLTAGE CONTROL	
	Cutout relay	Closing voltage @ generator rpm	13 - 13.75 VOLTS	11.8 TO 13.5 V (ADJ. 12.8 V)
		Reverse current to open	.5 TO 4.0 AMP.	.0 TO 4.0 AMP.
	Regulated	Voltage@70°F.	14.25 - 14.75 V	13.8 TO 14.8 V (ADJ. 14.5 V)
		Current @70°F.	30 AMP.	30 AMP.
	Min. Gen. rpm required		2300	2300
	Voltage test conditions	Temperature	70° F.	70° F.
		Load	10 AMP.	
		Other		.25 OHM FIXED RESISTANCE

ELECTRICAL—STARTING SYSTEM

Starting motor	Make		AUTO-LITE	DELCO-REMY
	Model		MDD 6301	1107635
	Rotation (drive end view)		CLOCKWISE	
	Engine cranking speed		40 RPM	
	Test conditions		N.A.	
	Lock test	Amps	395 AMPS.	470 AMPS.
		Volts	6.1 VOLTS	5.4 VOLTS
		Torque (lb. ft.)	14.6 FT. LBS.	11.5 FT. LBS.
	No load test	Amps	75 AMPS.	95
		Volts	11. VOLTS	10.1
		RPM (min.)	4400	3500
Motor control	Switch (solenoid, manual)		SOLENOID	
	Starting procedure		TURN IGNITION KEY BEYOND 'IGNITION ON' POSITION	

AMA Consolidated Specification Questionnaire

MAKE OF CAR PACKARD **MODEL YEAR** 1955

MODEL	5540	5560	5580

ELECTRICAL—STARTING SYSTEM (cont.)

Motor drive	Engagement type		BENDIX	SOLENOID ACTUATED SHIFT
	Pinion meshes (front, rear)		FRONT	
	Number of teeth	Pinion	9	
		Flywheel	182	
	Flywheel tooth face width		.375"	

ELECTRICAL—IGNITION SYSTEM

Coil	Make		AUTO-LITE		DELCO
	Model		CAD 4001		1115084
	Amps	Engine stopped			
		Engine idling			
Distributor	Make		AUTO-LITE		DELCO-REMY
	Model		IBJ 4001	IBJ 4001 A	1110854
	Spark advance data (at distributor shaft)	Centr. advance start (rpm) Dist	300	300	300
		Centr. advance max. deg. @ rpm	20° @ 1200	~~15°~~ 16° @ 1750 ~~@ 1500~~	16.° @ 2100 R.P.M.
		Vacuum advance start (in. Hg.)	6 In. Hg.	6 In. Hg.	6 In. Hg.
	Dist. & R.P.M.	Vac. adv. (max. deg. @ in. Hg.)	5 1/2 @ 10 In. Hg.	12° @ 13 In. Hg. ~~9° @ 12 In. Hg.~~	10° @ 12.5 In. Hg.
	Breaker gap (in.)		.016"		.016"
	Cam angle (deg.)		27°		26° - 33°
	Breaker arm tension (oz.)		19-23		
Timing	C/S deg. @ rpm		6° BTDC		
	Mark location		VIBRATION DAMPER		
	Cylinder numbering system (see page 2)		----		
	Firing order (see page 2)		1-8-4-3-6-5-7-2		
Spark plug	Make and model		H-10 CHAMPION	AUTO-LITE AG-5	CHAMPION H-10
	Thread (mm)		14		
	Tightening torque (lb. ft.)		26-30		
	Gap		.033" - .037"		
Cable	Conductor type		COPPER-WIRE-TINNED		
	Insulation type		NEOPRENE		
	Spark plug protector		HYPALON		

ELECTRICAL—SUPPRESSION

Description	SUPPRESSOR IN DISTRIBUTOR ROTOR CONDENSER ON GENERATOR AND REGULATOR CONDENSER ON INSTRUMENT VOLTAGE REGULATOR GROUND STRAP ENGINE RT. BANK TO DASH GROUND STRAP HOOD TO FENDER CONDENSER ON IGNITION COIL

AMA Consolidated Specification Questionnaire

MAKE OF CAR PACKARD **MODEL YEAR** 1955

MODEL	5540	5560	5580

ELECTRICAL—INSTRUMENTS AND SWITCHES

Speed-ometer	Make	KING-SEELEY	
	Trip odometer (yes, no)	YES	YES
Charge indicator—type		LIGHT	AMMETER
Temperature indicator—type		THERMAL TYPE	THERMAL TYPE
Oil pressure indicator—type		LIGHT	PRESSURE GAUGE
Fuel indicator—type		ELECTRICAL	ELECTRICAL
Ignition switch	Identify positions in order and circuits controlled	VERTICAL - OFF 1st POSITION RIGHT OF VERTICAL - IGN. & ACC. 'ON' 2nd POSITION RIGHT OF VERTICAL - IGN. & ACC. 'ON' & START 1st POSITION LEFT OF VERTICAL - ACC. 'ON'	
	Provision for illumination	LIGHT	
	Location	ABOVE CYLINDER	
	Theft protection type	NO	
Main lighting switch	Identify positions and lights controlled	#1 POSITION - PARK & TAIL #2 POSITION - HEADLAMP & TAIL	
Other light switches	Locations and lamps controlled	RHEOSTAT ON HEADLAMP SWITCH TO CONTROL INSTRUMENT & CLOCK LIGHTS. GLOVE BOX LIGHT SWITCH. DOOR SWITCHES FOR COURTESY LIGHTS. PILLAR SWITCH FOR DOME LIGHT.	
Other switches	Locations and devices controlled	ELECTRIC ANTENNA SWITCH ON INSTRUMENT PANEL. CONVERTIBLE TOP SWITCH ON INSTRUMENT PANEL. WINDOW CONTROL SWITCHES ON DOORS. SEAT CONTROL SWITCH ON LEFT SIDE OF FRONT SEAT.	
Windshield wiper	Make	TRICO (SUPER SPEED)	
	Type	VACUUM	
	Vacuum booster provision	YES (ON OIL PUMP)	
	Washer provision	YES	
Horn	Type	VIBRATOR	
	Number used	2	
	Amp draw (each)	N.A.	

ELECTRICAL--SUSPENSION COMPENSATOR MOTOR

Make & Model			DELCO #1109910
Rotation			EITHER (CLOCKWISE OR COUNTERCLOCKWISE)
Brush Spring Tension			22 - 26 OZ.
Test Spec.	Max. Amps.		9 (NO LOAD) 70 (LOCK TEST)
	Volts		12 (NO LOAD) 11.3 (LOCK TEST)
	R.P.M.		2200 (NO LOAD)
	Min. Torque		3 LBS. FT. (LOCK TEST)

AMA Consolidated Specification Questionnaire

MAKE OF CAR PACKARD **MODEL YEAR** 1955

MODEL	5540	5560	5580

ELECTRICAL—LAMP BULBS

Give quantity used and trade number, e.g., Headlamp 2-4030.
Indicate accessories which are not standard equipment by an asterisk following the numbers.

Headlamp		2-4400
Headlamp beam indicator		1-57
Parking light		2-1034
Tail light		2-1034
Stop light		2-1034
Direction indicator	Front	2-57
	Rear	2-57
	Tell-Tale	2-57
License plate light		2-67
Instrument light		4-57
Ignition lock light		1-53
Map light *		1-1004
Dome light		1-1004
Clock light		1-57
Radio dial light		1-57
Glove compartment light		1-57
Courtesy light *		1-1004
Trunk compartment light		1-89
Other		
Side Lamp (Running)	----	2-67
Side Lamp (Courtesy)	----	2-1004

ELECTRICAL—FUSE & CIRCUIT BREAKER DATA

Use trade number of fuse, e.g., SFE-10. Indicate circuit breaker by ampere capacity suffixed by letters "C.B", e.g., 30 C.B. Where fuse or circuit breaker protects multiple circuits indicate first use by a letter and repeat the same letter for all units protected by the same fuse or circuit breaker, e.g., Parking light: SFE-10 (a), Direction indicator: same as (a).

Headlamp	CB 22 AMP.
Headlamp beam indicator	CB 22 AMP.
Parking light	CB 22 AMP.
Tail light	CB 22 AMP.
Stop light	SFE 20
Direction indicator	SFE 9
License plate light	CB 22 AMP.
Instrument light	CB 22 AMP.
Ignition light	CB 22 AMP.
Map light	CB 22 AMP.
Dome light	SFE 20
Clock	A9A 2
Clock light	CB 22 AMP.
Radio	SFE 9
Glove compartment light	CB 22 AMP.
Courtesy light	SFE 20
Trunk compartment light	CB 22 AMP.
Other	
Suspension Compensator Motor	CIRCUIT FEED SFE-20

* Same Lamp.

AMA Consolidated Specification Questionnaire

MAKE OF CAR PACKARD **MODEL YEAR** 1955

MODEL			5540	5560	5580
DRIVE UNITS—CLUTCH (PEDAL OPERATED)					
Make			LONG		
Type (dry or wet plate)			DRY		
In combination with fluid coupling (yes, no)			NO		
Semi-centrifugal (yes, no)			YES		
Type pressure plate springs			COIL		
Total plate pressure (lb.)			1467		
No. of clutch driven discs			ONE		
Clutch facing	Material		WOVEN ASBESTOS		
	Inside diameter		7"		
	Outside diameter		10.5"	11."	
	Total eff. area (sq. in.)		96.2	133.1	
	Thickness		.125"		
	Number required		TWO		
	Engagement cushioning method		TORBEND DISC		
	Release bearing	Type	BALL		
		Method of lubrication	PRELUBRICATED		
	Torsional damping	Method (springs, other)	SPRINGS		
		Frict. mat.	MOLDED ASBESTOS		
DRIVE UNITS—TRANSMISSIONS					
Conventional (std. or opt.)			STD.		
Conventional with overdrive (std. or opt.)			OPT.		
Automatic (std. or opt.)			OPT.		STD.
DRIVE UNITS—CONVENTIONAL TRANSMISSION					
Number of forward speeds			3		
Transmission ratios	In first		2.490		
	In second		1.587		
	In third		1.000		
	In fourth		----		
	In reverse		3.154		
Constant mesh gears in 2nd (yes, no)			YES		
Spur gear used in (indicate speeds)			NONE		
Helical gears used in (indicate speeds)			FIRST, SECOND, REVERSE		
Synchronous meshing in 2nd and 3rd gears (yes, no)			YES		

AMA Consolidated Specification Questionnaire

MAKE OF CAR PACKARD **MODEL YEAR** 1955

MODEL			5540	5560	5580
DRIVE UNITS—CONVENTIONAL TRANSMISSION (cont.)					
Lubricant	Capacity (pt.)		3 1/4 (X)		
	Type recommended		MULTI-PURPOSE GEAR OIL		
	SAE viscosity number	Summer	90		
		Winter	90		
		Extreme cold	80		

DRIVE UNITS—CONVENTIONAL TRANSMISSION WITH OVERDRIVE

For transmission data see conventional transmission section

Overdrive	Type (planetary or other)			PLANETARY	
	If planetary, No. of pinions			FOUR	
	Manual lockout (yes, no)			YES	
	Downshift accelerator control (yes, no)			YES	
	Minimum cut-in speed			22 M.P.H.	
	Gear ratio			.722 TO 1	
	Lubricant	Capacity (O.D. only)		1 1/4 PINTS	
		Separate filter (yes, no)		YES	
		Type recommended		MULTI-PURPOSE GEAR OIL	
		SAE viscosity number	Summer	90	
			Winter	90	
			Ext. cold	80	

DRIVE UNITS—AUTOMATIC TRANSMISSION

Trade name	ULTRAMATIC
Type (fluid coupling with gears, torque convertor with gears, other)	TORQUE CONVERTOR - PLUS AUTOMATIC UPSHIFT IN GEARS AT DRIVER'S OPTION
Manual selector positions, left to right (show symbols and define, e.g., N- Neutral)	P-PARK N-NEUTRAL D-HIGH - TRIANGLE TO LEFT OF LETTER 'D' DRIVE - TRIANGLE TO RIGHT OF LETTER 'D' L-LOW & R-REVERSE
List gear ratios in each drive position (range)	HIGH-TORQUE CONVERTOR AUTOMATICALLY UPSHIFTING TO DIRECT DRIVE. DRIVE-TORQUE CONVERTOR PLUS 1.82 GEAR RATIO AUTOMATICALLY UPSHIFTING TO HIGH, & UPSHIFT TO DIRECT DRIVE. LOW-TORQUE CONVERTOR PLUS 1.82 GEAR RATIO. REVERSE-TORQUE CONVERTOR PLUS 1.63 GEAR RATIO
Shifting within drive position range by accelerator control and speed limiting governor (yes, no)	YES
By governor—forced shift (yes, no)	NO - BY ACCELERATOR CONTROL
Downshift of gears in high range possible up to (mph)	DOWN TO CONVERTOR AND LOW AT SPEEDS BELOW 55 M.P.H.

(X) 2 3/4 pt. when equipped with Overdrive.

AMA Consolidated Specification Questionnaire

MAKE OF CAR PACKARD **MODEL YEAR** 1955

MODEL	5540	5560	5580

DRIVE UNITS—AUTOMATIC TRANSMISSION (cont.)

Torque convertor	Number of elements		FOUR
	Max. ratio at stall at engine rpm		2.9:1 @ 1650 r.p.m.
	Mechanical lockup	Provided (yes, no)	YES
		Speed range	15 TO 55 M.P.H.
		Releases at (speed range, mph)	15
	Type of cooling (forced air, oil cooler and type, other)		WATER COOLED OIL COOLER
	Anti-creep device (yes, no)		NO
Lubricant	Capacity—refill (pt.)		22 PINTS
	Type recommended		SAE A1
	Grade	Summer	SAME
		Winter	SAME
		Extreme cold	SAME

DRIVE UNITS—PROPELLER SHAFT

Number used			1	
Type (exposed, torque tube)			EXPOSED	
Outer diameter x length* x wall thickness	Conventional trans.		2.750" x 48.812" x .065"	
	Overdrive trans.		2.750" x 48.812" x .065"	
	Automatic trans.		2.500" x 51.844" x .065"	2.750" x 56.594" x .065"
Intermediate bearing	Type (plain, anti-friction)		NOT USED	
	Lubri. (fitting, prepack)		----	
Universal joints	Make		SPICER - STANDARD AND OVERDRIVE UNIVERSAL PRODUCTS - ULTRAMATIC	
	Number used		2	
	Type (ball and trunnion, cross, other)		STANDARD AND OVERDRIVE - CROSS AND YOKES ULTRAMATIC - FRONT JOINT - BALLS AND TRUNNION ULTRAMATIC - REAR JOINT - CROSS AND YOKES	
	Bearing	Type (plain, anti-friction)	ANTI-FRICTION	
		Lubric. (fitting, prepack)	SPICER - FITTING UNIVERSAL PRODUCTS - PREPACK	
Drive taken through (torque tube or arms, spring)			REAR SPRINGS	TORQUE ARMS
Torque taken through (torque tube or arms, springs)			REAR SPRINGS	TORQUE ARMS

*Centerline to centerline of joints or centerline of rear attachment point.

AMA Consolidated Specification Questionnaire

MAKE OF CAR PACKARD **MODEL YEAR** 1955

MODEL	5540	5560	5580

DRIVE UNITS—REAR AXLE

Type (semi-floating, other)			SEMI-FLOATING	
Gear type (hypoid, other)			HYPOID	
Gear ratio and No. of teeth*	Conventional trans.		3.9 TO 1 10 - 39	
	Overdrive trans.		3.9 TO 1 10 - 39	
	Automatic trans.		3.23 TO 1 (X) 13 - 42	3.07 TO 1, 3.54 TO 1, 3.28 TO 1 14-43 11 - 39 13-42
Pinion adjustment (shim, other)			NONE	
Pinion bearing adj. (shim, other)			COLLAPSIBLE SPACER AND NUT	
Lubricant	Capacity (pt.)		4 1/4	
	Type recommended		MULTI-PURPOSE	
	SAE viscosity number	Summer	90	
		Winter	90	
		Extreme cold	80	

DRIVE UNITS—WHEELS

Type (disc, other)			DISC	DISC
Rim (size and flange type)			SAFETY RIM 15" x 5 1/2" 'K'	SAFETY RIM 15" x 6" 'L'
Attachment	Type (bolt or stud)		BOLT	BOLT
	Circle diameter		4 1/2"	5"
	Number and size		5 - 1/2"	5 - 9/16"

DRIVE UNITS—TIRES

Size and ply rating	Standard		7.60 x 15 - 4 PLY (TUBELESS)	8.00 x 15 - 4 PLY (TUBELESS)
	Optional		7.60 x 15 - 6 PLY (TUBELESS)	8.00 x 15 - 6 PLY (TUBELESS)
Rev/mile at 30 mph			731	717
Inflation press. (cold)	Front (XXX)		24	24
	Rear (XXX)		24	24

BRAKES—SERVICE

Type			HYDRAULIC - 2-SHOE	
Booster type			~~BASE~~MATIC POWER BRAKE (OPTIONAL) (XX)	
Effective area (sq. in.)			191.8	208.25
Percent brake effectiveness—rear			40	
Drum	Diameter	Front	11"	12"
		Rear	11"	12"
	Type and material		CENTRIFUSE-CAST IRON	

* Optional Gear Ratios: Conventional Transmissions: 3.07:1, 3.23:1, 3.54:1, 4.1:1, 4.55:1

Automatic Transmissions: 3.07:1, 3.23:1, 3.54:1, 3.9:1, 4.1:1

Overdrive & Transmissions: 3.54:1, 4.1:1

(X) Standard Axle Ratio for Model 5522 with Automatic Transmissions: 3.07:1

(XX) Power Brake Standard on Model 5588.

(XXX) Recommended inflation pressure for greater than four passenger load is 26 p.s.i. (cold) front and rear.

AMA Consolidated Specification Questionnaire

MAKE OF CAR PACKARD **MODEL YEAR** 1955

MODEL	5540	5560	5580

BRAKES—SERVICE (cont.)

Brake lining	Bonded or riveted			RIVETED		
	Primary	Material		MARSHALL 4112		
		Size (length x width x thickness)	Front wheel	9.3125" x 2.5" x .1875"	11.5" x 2.250" x .1875"	
			Rear wheel	9.3125" x 2." x .1875"	11.5" x 2." x .1875"	
		Segments per shoe		ONE		
	Secondary	Material		MARSHALL 9051		
		Size (length width x thickness)	Front wheel	12." x 2.25" x .1875"	13." x 2.25" x .1875"	
			Rear wheel	12." x 2." x .1875"	13" x 2." x .1875"	
		Segments per shoe		ONE		
Wheel cylinder bore	Front			1.125"		
	Rear			1.0625"	1.000"	
Master cylinder bore				1.000"		
Available pedal travel				6.750"		
Line pressure at 100 lb. pedal load				710 PSI		
Shoe clearance adjustment				.010"		

BRAKES—PARKING

Type of control		T-HANDLE
Location of control		LEFT OF STEERING COLUMN
Operates on		REAR BRAKES
If separate from service brakes	Type (internal or external)	---
	Drum diameter	---
	Lining size (length x width x thickness)	---

FRAME

Type and description	CHANNEL STEEL SIDE MEMBERS FULL LENGTH OF FRAME JOINED TOGETHER BY CROSS MEMBERS, PLUS 'X' MEMBER

FRONT SUSPENSION

Type and description	INDEPENDENT PARALLELOGRAM	INDEPENDENT PARALLELOGRAM FULL LENGTH TORSION BAR

AMA Consolidated Specification Questionnaire

MAKE OF CAR PACKARD **MODEL YEAR** 1955

MODEL	5540	5560	5580

FRONT SUSPENSION (cont.)

	Type	COIL	FULL LENGTH TORSION BAR	
	Material	ALLOY STEEL		
Spring	Size (length x width x No. leaves or coil I.D.)	4.250" I.D.	Long: 106." (X) Short: 46.125"	Long: 111." Short: 51."
Spring	Spring rate (lb. per in.)	300	----	
Spring	Rate at wheel (lb. per in.)	90	----	
Spring	Normal load (lb. @ rated length)	2040 lbs. @ 10.4375"	----	
Shock absorbers	Manufacturer	DELCO OR MONROE		
Shock absorbers	Type (direct or lever)	DIRECT		
Shock absorbers	Piston diameter	1"		
Stabilizer	Type (link, linkless, frameless)	LINKLESS		
Stabilizer	Material	SAE 1064, 1084, 1090 OPT. STEEL		

STEERING

Type used (Standard or optional)		Mechanical		STANDARD	
		Power		OPTIONAL (XX)	
Wheel diameter				18"	
Turning diameter	Outside front	Wall to wall (r. & l.)		46 FT (44 FT. P.S.)	48 FT (46 FT. P.S.)
		Curb to curb (r. & l.)		43 FT (41 FT. P.S.)	45 FT (43 FT. P.S.)
	Inside rear	Wall to wall (r. & l.)		N.A.	
		Curb to curb (r. & l.)		N.A.	
Inside wheel angle with outside wheel at 20°				23 3/4°	
Mechanical	Gear	Type		WORM AND THREE TOOTH ROLLER	
Mechanical	Gear	Make		GEMMER	
Mechanical	Gear	Ratios	Gear	22.3 TO 1	
Mechanical	Gear	Ratios	Overall	(XXX) 30.9 TO 1	
Mechanical	No. wheel turns			4 3/4	
Power	Type			LINKAGE TYPE	LINKAGE TYPE
Power	Make			MONROE	BENDIX
Power	Trade name			----	----
Power	Gear	Type		WORM AND THREE TOOTH ROLLER (GEMMER)	
Power	Gear	Ratios	Gear	18.2 TO 1	18.6 TO 1
Power	Gear	Ratios	Overall	22.0 TO 1	22.5 TO 1
Power	Pump driven by			BELT TO CRANKSHAFT	
Power	Overall torque ratio			----	
Power	Number wheel turns			3 7/8	
Linkage	Type			SIDE IDLER	
Linkage	Location (front or rear of wheels)			REAR	
Linkage	Drag link (trans. or long)			TRANSVERSE	
Linkage	Tie rods (one or two)			TWO	

(X) Long Torsion Bars are for Main Suspension. Short Torsion Bars are for Load Compensator.

(XX) Power Steering Standard Equipment on Model 5588.

(XXX) At Center Position.

AMA Consolidated Specification Questionnaire

MAKE OF CAR PACKARD **MODEL YEAR** 1955

MODEL	5540	5560	5580

STEERING (cont.)

Kingpin	Inclination at camber (deg.)		5° 50' @ 0° CAMBER	
	Diameter		.8663"	
	Bearings (type)	Upper	NEEDLE	
		Lower	BUSHING (XXX)	
		Thrust	BALL	
Wheel alignment (range and preferred)	Caster (deg.)		-1° ± 1/2°	
	Camber (deg.)		+ 3/4°	
			0° - 1/4°	
	Toe-in (outside tread-inches)		0 TO + 1/16"	
Steering knuckle type			REVERSE ELLIOT	
Wheel spindle	Diameter	Inner bearing	1.250"	1.312"
		Outer bearing	.750"	.812"
	Thread size		.750" - 16	
	Bearing type		TAPERED ROLLER	

REAR SUSPENSION

Type			LONGITUDINAL LEAF	TORSION BAR (FULL LENGTH)	
Drive and torq. taken through (see page 14)			REAR SPRINGS	TORQUE ARM	
Spring	Type		SEMI-ELLIPTIC	TORSION BAR	
	Material		ALLOY STEEL		
	Size (length x width x No. leaves or coil I.D.)		54.375" x 2.5" x 5	Long: 106." Short: 46.125"	Long: 111" Short: 51"
	Spring rate (lb. per in.)		95		
	Rate at wheel (lb. per in.)		95		
	Normal load (lb. at rated length)		950		
	Mounting insulation type		RUBBER BUSHING		
	If leaf	No. of leaves	5		
		Covers (yes, no)	NO		
		Lubricated (yes, no)	NO		
		Inserts: Type and size	FULL LENGTH		
		Inserts: Material	(X)		
		Shackle (comp. or tens.)	TENSION		
Shock absorbers	Manufacturer		DELCO OR MONROE		
	Type (direct or lever)		DIRECT		
	Piston diameter		1"		
Stabilizer	Type (link, linkless, frameless)		----	2-LINK TYPE	
	Material		----	STEEL	
Track bar type					

(X) 5540 - Phenolic Resin and Wax Impregnated Material.

(XX) Long Torsion Bars are Main Suspension. Short Torsion Bars are for Load Compensator.

(XXX) Needle Bearing on Lower on Power Steering Equipped Cars.

AMA Consolidated Specification Questionnaire

MAKE OF CAR PACKARD **MODEL YEAR** 1955

BODY—GENERAL DEFINITIONS

NOTE: Included in the dimension definitions listed on this and the following pages are those which have been proposed for adoption by the SAE. These are indicated by a number following the type of dimension, e.g., L 3. Additional dimensions have been added by the AMA Specifications Body Sub-Committee for inclusion in the Questionnaire. These are shown by an additional letter, e.g., HA. The dimensions are developed from the following basic points:

1. Front and rear seat "A" points are taken 5" forward of vertical tangent to seat back 15" from center of body.
2. Front seat is in the rear position.
3. Loaded position—5 passengers, front 300 lb., rear 450 lb., includes spare wheel, tire and tools, and full complement of gas, oil, water, etc. and tires to recommended pressure, etc.
4. C. L. (centerline).
5. D. L. O. (daylight opening, exposed glass dimension).
6. Ramp breakover angle (page 20-A) is the supplement of the included ramp angle (180° minus the included ramp angle) over which a car can pass without hanging up.

MODEL	5540	5560	5580

BODY—TRUNK OPENING DIMENSIONS

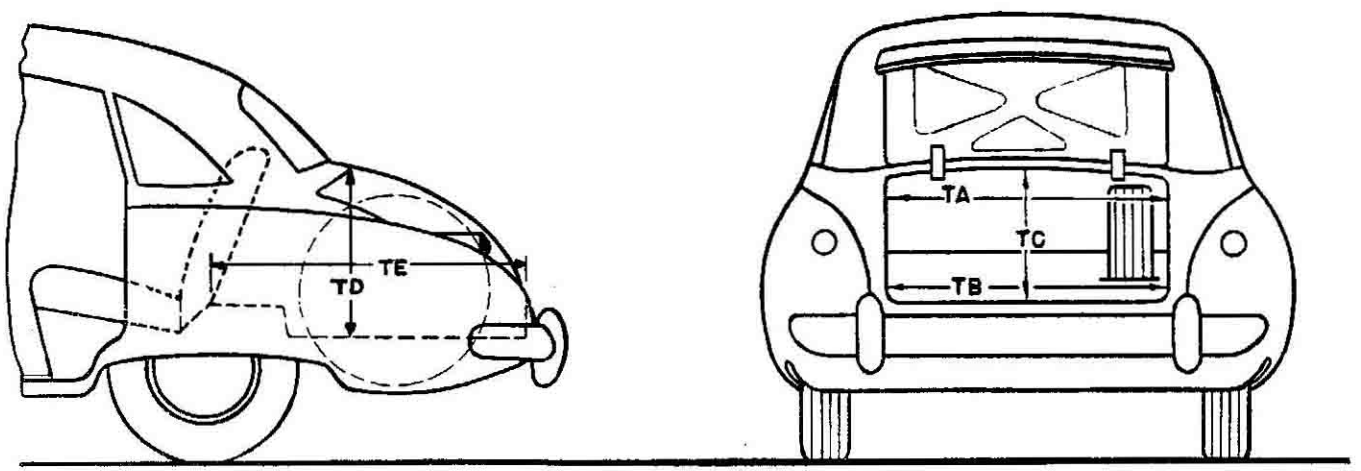

TA—Width across the top	55.4"
TB—Width across the bottom	53"
TC—Diagonal dimension at CL from top of opening to bottom	38" (X)
TD—Vertical height of opening (floor to top, inside edge of opening)	22.5"
TE-Max. horizontal depth (forward from vertical projection of inside edge of opening)	54.8"
Position of spare tire stowage	RIGHT SIDE, LONGITUDINAL, VERTICAL INCLINED OUTWARD
Method of holding lid open	COUNTERBALANCED SPRINGS AT TRUNK LID HINGE

(X) Model 5588 - 33.5"

AMA Consolidated Specification Questionnaire

MAKE OF CAR PACKARD **MODEL YEAR** 1955

MODEL	5540	5560	5580

BODY—HEIGHT DIMENSIONS—INTERIOR

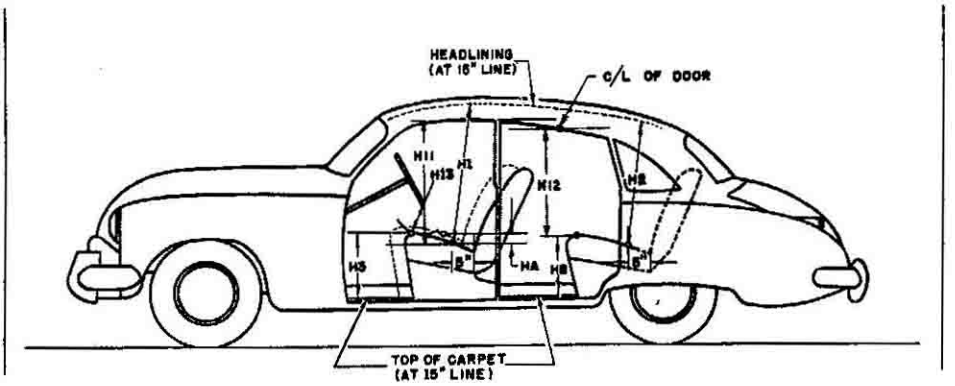

H1. Front headroom—from "A" pt. to headlining at 8° back of vertical on 15" line. (For "A" pt. see note 1, page 19)	36.2"	36.2" (XX)
H2. Rear headroom—from "A" pt. to headlining at 8° back of vertical on 15" line.	34.5" (XXXX)	34.9" (XXX)
H3. Front seat height to floor carpet on 15" line (front edge of cushion).	13.8" (X)	13" (X)
H8. Rear seat height to floor carpet on 15" line (front edge of cushion).	13.4" (YY)	13.8" (Y)
H11. Entrance—front—cushion "A" point to bottom windcord vertical.	30.6"	31" (YYY)
H12. Entrance—rear—top of cushion to bottom windcord vertical at C/L of rear door.	27.7"	26.9"
H13. Steering wheel clearance to seat cushion taken on arc.	5.1"	5.5" (YYYY)
HA. Front seat vertical rise at "A" pt. (inches.)	1.000"	1.000"

(X) Models 5547, 67, 87, 88 - 13.6"
(XX) Model 5588 - 35.7"
(XXX) Model 5588 - 35"
(XXXX) Models 5547, 67, 87 - 35.5"
(Y) Model 5588 - 12.9" - 5587 - 12.1"
(YY) Models 5547, 67 - 12.5"
(YYY) Models 5547, 87, 88 - 30.5"
(YYYY) Model 5587, 88 - 5.1"

AMA Consolidated Specification Questionnaire

MAKE OF CAR PACKARD **MODEL YEAR** 1955

MODEL	5540	5560	5580

BODY—HEIGHT DIMENSIONS—EXTERIOR

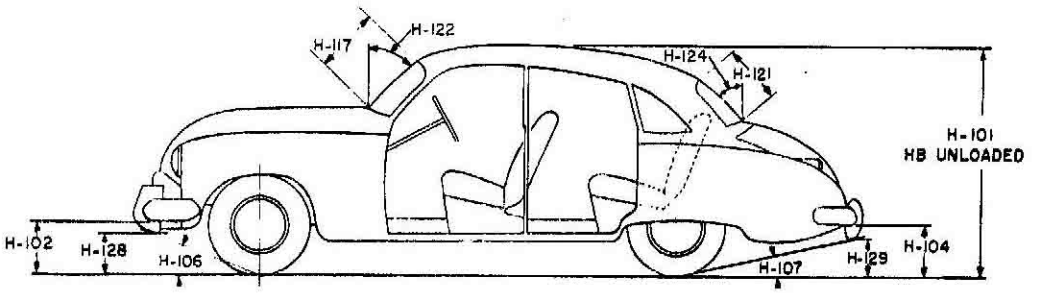

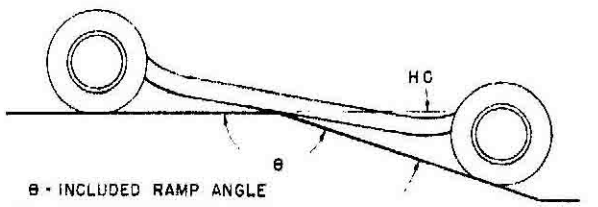

θ - INCLUDED RAMP ANGLE
HC - RAMP BREAKOVER ANGLE
(SUPPLEMENT OF INCLUDED RAMP ANGLE)

H101. Overall height.	62" (X)		62.3" (X)
HB. Overall height—unloaded.	N.A.		
H102. Front bumper bottom to ground at normal section.	11.71"		12.1"
H104. Rear bumper bottom to ground at normal section.	10.7"		11.3"
H106. Angle of approach—from the tire rolling radius to lowest point on front bumper or guard.	29°		
H107. Angle of departure—from the tire rolling radius to lowest point on rear bumper or guard.	8° 49'	9° 20'	13° 30'
HC. Ramp breakover angle.*	5° 23'		5° 48'
H117. Windshield DLO-slant height.	17.6" (XX)		
H121. Backlight DLO*—Max., slant height.	15.3" (XXX)		15.3" (XXXX)
H122. Windshield slope angle to vertical line on car axis.	41° - 43'		
H124. Backlight slope angle to vertical line on car axis.	45° - 30'		
H128. Ground to bottom of front bumper guard.	----		
H129. Ground to bottom of rear bumper guard.	----		
HD. Min. road clearance (location and dimension).	N.A.		
HE. Min. road clearance at rear axle.	8.4"		8.7"

*See Notes, page 19.

(X) Models 5547, 67, 5587, 88 - 61.7"
(XX) Model 5588 - 16.8"
(XXX) Models 5547, 67, 87 - 16.4"
(XXXX) Model 5588 - 19"

AMA Consolidated Specification Questionnaire

MAKE OF CAR PACKARD **MODEL YEAR** 1955

MODEL	5540	5560	5580

BODY—LENGTH DIMENSIONS

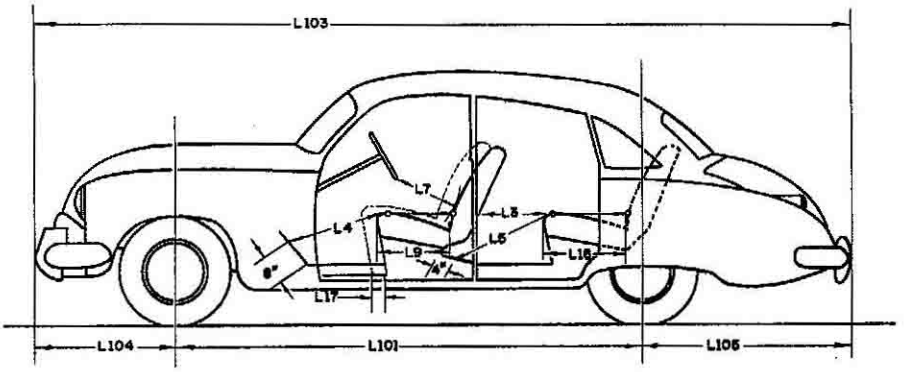

Interior	**L3.** Rear compartment back of front seat back to rear seat back.	31.4" (X)	37.1" (X)
	L4. Leg room—front—diagonal—ball of foot to top of seat to front seat back—15" line.	43.3"	43"
	L5. Leg room—rear—diagonal—from ball of foot to top of rear seat cushion and to seat back.	43.8"	48.8" (XX)
	L7. Steering wheel clearance to seat back taken on arc.	14.3"	14.8"
	L9. Front seat depth (front edge to vert. tan. to seat back on 15" line).	18.3"	18.4"
	L16. Depth of rear seat (front edge to seat back).	19"	
	L17. Total adjustment of front seat at floor.	5"	
Exterior	**L101.** Wheel base.	122"	127"
	L103. Overall length (bumper to bumper inc. guards).	214.8"	218.5"
	L104. Overhang—front including bumper guards.	36.2"	36.2"
	L105. Overhang—rear including bumper guards.	56.6"	55.3"

(X) Models 5547, 67, 87, 88 - 32.1"
(XX) Models 5587, 88 - 43.8"

AMA Consolidated Specification Questionnaire

MAKE OF CAR PACKARD **MODEL YEAR** 1955

MODEL	5540	5560	5580

BODY—WIDTH DIMENSIONS

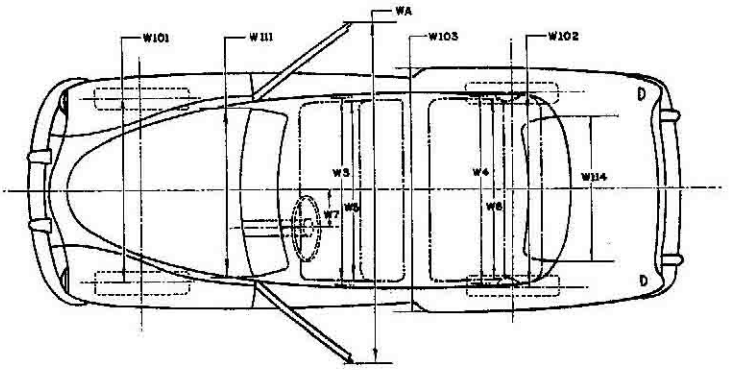

Interior	**W3.** Front shoulder room, at garnish moulding height or nearest interference 5″ forward of seat back.	57″		
	W4. Rear shoulder room, at garnish moulding height or nearest interference 5″ forward of seat back.	55.5″ (X)		
	W5. Front hip room, at top of seat 5″ forward of vert. tan. to seat back.	62.8″		
	W6. Rear hip room, at top of seat 5″ forward of vert. tan. to seat back.	62″ (XXX)	(XX)	
	W7. Steering wheel center to center of body.	15.1″		
Exterior	**W101.** Front tread at ground.	59.7″	60″	
	W102. Rear tread at ground.	60″	60.9″	
	W103. Max. overall width of car including bumpers or mouldings.	78″		
	WA. Max. overall width of car with doors open.	148″		
	W111. Windshield DLO, max. width.	59.4″		
	W114. Back window DLO, max. width.	59.3″ (YY)	59″ (Y)	

(X) Model 5588 - 48.5″
(XX) Model 5588 - 49.5″
(XXX) Models 5547, 67, 87 - 53.6″
(Y) Model 5588 - 41″
(YY) Models 5547, 67, 87 - 60.4″

AMA Consolidated Specification Questionnaire

MAKE OF CAR PACKARD **MODEL YEAR** 1955

MODEL	5540	5560	5580

BODY—MISCELLANEOUS INFORMATION

Doors hinged (front, rear)	Front	FRONT	
	Rear	FRONT	
Type of finish (lacquer, enamel)		LACQUER	
Hood opening (front, side; semi-full, full, half)		FRONT	
Hood counterbalanced (yes, no)		YES	
Hood release control (internal, external)		EXTERNAL	
Vent window control method (crank, friction, pivot).		FRICTION PIVOT	
Windshield (one piece, two piece; curved, flat)		CURVED ONE PIECE	
Rear window type (one piece, two piece, three piece; curved, flat)		CURVED ONE PIECE	
Windshield glass area sq. in.		1076.86	1076.86 (Y)
Backlight glass area sq. in.		968.018 (X)	927.200 (YY)
Total glass area sq. in.		3276.603 (XX)	3235.785 (YYY)

BODY—TYPES AND STYLE NAMES

Body type, number of passengers, and style names (use letter code shown below followed by passenger capacity and style name e.g., N-6 Ranchwagon)			
	G-6 (SEDAN)		
	G-6 (SEDAN)	G-6 (SEDAN)	G-6 (SEDAN)
	J-6 (PANAMA)	J-6 (CONSTELLATION)	J-6 (FOUR HUNDRED)
			M-6 (CARIBBEAN)

Body type code

A—Coupe—2 door flatback
B—Coupe—2 door notchback
C—Sedan—2 door flatback
D—Sedan—2 door notchback
E—Sedan—4 door flatback (4 windows)
F—Sedan—4 door flatback (6 windows)
G—Sedan—4 door notchback (4 windows)
H—Sedan—4 door notchback (6 windows)
J—Hardtop—2 door
K—Hardtop—4 door
L—Convertible—2 door
M—Convertible—4 door
N—Station wagon—2 door
P—Station wagon—4 door
Q—Combined passenger and utility—2 door
R—Combined passenger and utility—4 door
S—Sedan delivery
T—Limousine

(X) Models 5547, 67 - 1054.800
(XX) Models 5547, 67 - 3242.988
(Y) Model 5588 - 1040.960
(YY) Model 5588 - 780.000, Model 5587 - 1054.800
(YYY) Model 5588 - 2932.280, Model 5587 - 3242.988